Automatic Hearing Conservation Audiometer

HT Wizard Ultra

Easy-Touch Audiometer

- Full-color, adjustable touch-entry display
- Automatic subject instructions
- Separate left/right revised baselines
- ID Wizard™ for compliance documentation
- Extra-wide format, high speed printer
- Dual calibration for two headsets
- Automatic system verification
- PC Interface to most software
- OSHA recordable report
- Microsoft Windows® XP operating system
- External storage back up
- External mouse & keyboard
- 10,000 audiogram storage
- STS & OSHA reports

TRE METRICS®

HT Wizard Ultra
Audiometer

Accurate results every time

The goal of any good hearing conservation program is the timely identification of those employees who may be experiencing a hearing loss due to work-related noise exposure. The HT Wizard provides one of the key elements for building a highly successful program.

The versatile HT Wizard tests from -10 to 100 dB and from 500 Hz through 8000 Hz. The accuracy and repeatability of the testing methodology is based on experience gained from providing thousands of audiometers for industry and government testing programs.

The audiometer uses the accepted Hughson-Westlake test paradigm, with a fully automated test routine or the choice to test manually or semi-automatically for just one selected ear/frequency or several.

The Wizard incorporates sophisticated retest and validation checking to ensure that proper hearing threshold levels are determined and includes built-in safeguards to alert the operator if individuals are attempting to manipulate test results.

Totally Automated Hearing Testing

The HT Wizard is the new easy-touch testing audiometer designed and built by Tremetrics, the leading manufacturer of occupational hearing testing equipment in the U.S. For over 45 years, Tremetrics has been the industry innovator – pioneering all of the major advances including microprocessor and self-recording audiometry, hearing/health database software, the OSCAR™ Electro-Acoustic Ear and interactive multi-language hearing testing capability.

Now Tremetrics is leading the industry with an interactive touch-screen interface that makes your testing faster and more convenient than ever before. Touch entry is easy and natural. The user simply touches a finger to the desired operation or function. To customize the program, subject questions and answers can now be entered right on the screen. Enter data once and the choices are then stored in convenient drop-down lists that activate with a touch. Touch to select an answer, touch to start a test, touch to print out an archival-quality audiogram. It really is that easy!

Test in the subject's preferred language

The HT Wizard gives automatic spoken instructions in the subject's preferred language through their earphones, then continuously monitors the hearing test and re-instructs when necessary. Patented multimedia testing* allows each subject to more confidently respond to the test tones, and assures a more reliable measure of their hearing acuity. Currently seven language choices are available and more are being added as required. A built-in speaker allows the operator to hear the instructions as the test progresses.

* U.S. Patents #5, 811,681; #6, 416,482; B1 #6, 644,120, B1 #6, 468,224; #7, 210, 353

A large, easy-touch color display quickly adapts to any testing height and allows full-color, full-screen monitoring of test data.

Instant compliance documentation

Documenting OSHA compliance can be very tedious, but occupational health professionals have to do it. The government expects it, today's litigious society certainly demands it. Now for the first time an audiometer actually makes this task incredibly easy.

The HT Wizard uses patented ID Wizard™ technology which verifies that the headphones calibrated with the audiometer are the ones actually being used. It also confirms that the left and right earphones are not interchanged and that they are correctly connected, even through the sound room wall. This fact is recorded on the audiogram printout as compliance documentation. The unit even allows calibration of two headsets so a calibrated backup is always immediately available.

What about the daily functional check? Each OSCAR 6 and OSCAR 7 Electro-Acoustic Ear communicates its unique ID to the HT Wizard, allowing the audiometer to match the daily biological test with the baseline established at the time of calibration.

The successful completion of the Daily Biological test is saved for future reference in the Daily Biological Log. Included in the log is documentation that the equally important listening check was performed. Also, the operator is reminded once each shift that a Daily Biological is due. The HT Wizard instantly documents compliance by showing that these important functions were performed.

When the HT Wizard is used with the OSCAR 7 Electro-Acoustic Ear and Octave Monitor, ambient noise inside the testing enclosure is constantly evaluated to insure that the background levels do not exceed OSHA standards. If the levels are exceeded, the test is paused, and will be resumed after the levels are below the maximum allowed. An annotation is added to the audiogram printout indicating that the ambient levels were monitored during the hearing tests and that they were within acceptable levels.

Automatic calibration reminder

And what about the audiometer's yearly calibration schedule? A renewal notation prompts the user starting at 45 days before calibration is due. You will be able to schedule a timely calibration and keep your program up and running without interruption.

Convenient reporting and data transfer

The extra-wide format, quiet internal printer provides a variety of management reports in addition to the extensive audiogram report. The printed reports are linked to the display so there's no need to sort through a long list of print options. For data transfer, a high speed RS232C interface provides remote batch transfer capability or serves as a direct link to mainframe computers or PC-based data management software such as Tremetrics HT Pro.

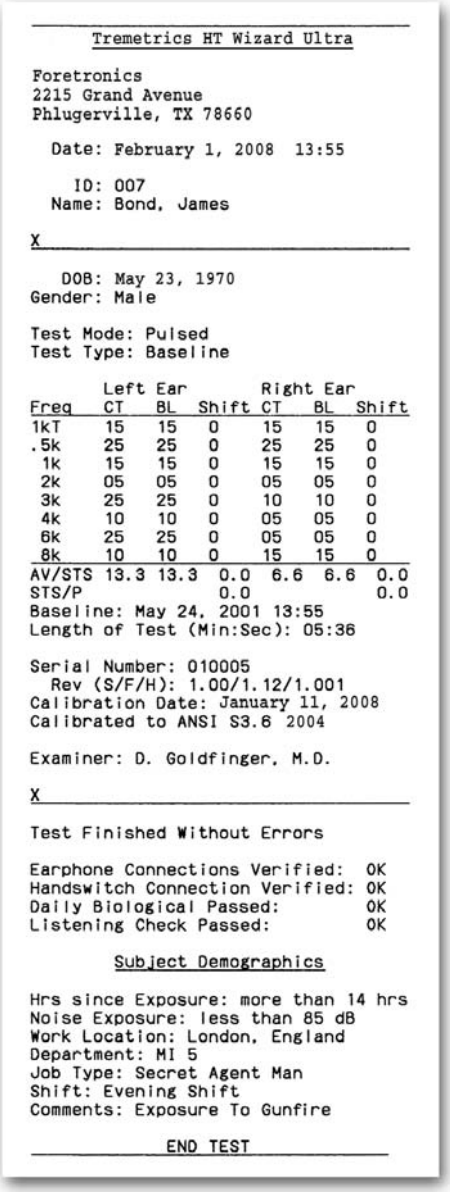

Tremetrics HT Wizard Ultra

Foretronics
2215 Grand Avenue
Phlugerville, TX 78660

Date: February 1, 2008 13:55

ID: 007
Name: Bond, James

X

DOB: May 23, 1970
Gender: Male

Test Mode: Pulsed
Test Type: Baseline

	Left Ear			Right Ear		
Freq	CT	BL	Shift	CT	BL	Shift
1kT	15	15	0	15	15	0
.5k	25	25	0	25	25	0
1k	15	15	0	15	15	0
2k	05	05	0	05	05	0
3k	25	25	0	10	10	0
4k	10	10	0	05	05	0
6k	25	25	0	05	05	0
8k	10	10	0	15	15	0
AV/STS	13.3	13.3	0.0	6.6	6.6	0.0
STS/P			0.0			0.0

Baseline: May 24, 2001 13:55
Length of Test (Min:Sec): 05:36

Serial Number: 010005
Rev (S/F/H): 1.00/1.12/1.001
Calibration Date: January 11, 2008
Calibrated to ANSI S3.6 2004

Examiner: D. Goldfinger, M.D.

X

Test Finished Without Errors

Earphone Connections Verified: OK
Handswitch Connection Verified: OK
Daily Biological Passed: OK
Listening Check Passed: OK

Subject Demographics

Hrs since Exposure: more than 14 hrs
Noise Exposure: less than 85 dB
Work Location: London, England
Department: MI 5
Job Type: Secret Agent Man
Shift: Evening Shift
Comments: Exposure To Gunfire

END TEST

The HT Wizard is compatible with most existing Occupational Health software programs utilizing the popular RA500 PC Interface.

Choose earphones or inserts

The HT Wizard can be calibrated with both Tremetrics ID Wizard TDH-39 and insert earphones. With the combination of headphones and insert earphones, required comparison tests can be accomplished with the HT Wizard. The appropriate calibration factors are automatically employed depending on which transducer is connected.

One source for Hearing Conservation

Turn to Tremetrics for complete hearing conservation solutions. The HT Wizard, used in conjunction with the OSCAR 6 or OSCAR 7 and the new AR 902 pre-assembled sound enclosure, provides you with all the necessary components for a compliant HC program. The total support package is rounded out with the Tremetrics national support organization insuring you that all your hearing conservation needs will be met by one experienced company.

HT Wizard Ultra

1. Lift screen lock to release display
2. Lift to adjust viewing angle
3. Release lever to lock in place

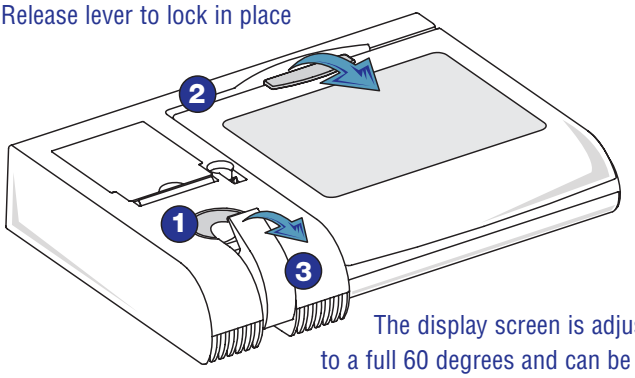

The display screen is adjustable to a full 60 degrees and can be locked into position for comfortable viewing.

Check the extra value features

- Electronic ID insures correct calibrated headset
- Daily Biological Log
- Automatic match of OSCAR baseline
- Seven languages available
- Automatic Sound Room Monitor provision
- Adjustable display angle
- Comprehensive test display
- 10,000 audiogram storage, 10,000 backup
- Adaptive response mode
- Automatic retest criteria
- Demographic data entry while test is being conducted
- OSHA, Canadian and military (MEPS) categorization
- High speed PC interface
- Calibration reminder
- Separate jacks for handswitch and OSCAR
- Multi-level password security
- Optional second headset or insert earphones calibration
- Insert earphones available
- Raw Data printout
- Graphical test representation
- Extensive hearing conservation reports

Specifications:

- Equals or exceeds ANSI S3.6-2004.
- Test frequencies: 500, 1000, 2000, 3000, 4000, 6000, 8000 Hz.
- Frequency accuracy: Better than 1% crystal controlled.
- Distortion: Total harmonic distortion below 40 dB (1%).
- HL attenuation: -10 dB to 100 dB in 5 dB steps.
- HL accuracy: ±1 dB.
- Rise/Fall time: Meets ANSI specifications.
- Calibration: Non-volatile EEPROM, calibration date printed on each audiogram. Calibration reminder 45 days prior to renewal.
- Provision for calibration of two headsets or headset/inserts.
- Multimedia subject instruction languages: Currently seven - English, Spanish, Italian, French, German, Cambodian and Vietnamese.
- Compliance documentation: Calibration; Daily Biological test; earphone, OSCAR and handswitch identification.
- Headset: Telephonics TDH-39, 10 ohm earphones in Model MX41 cushions - includes ID Wizard™ automatic identification for compliance reporting (patent pending).
- Handswitch: Long life, exceeding 1,000,000 closures - includes ID Wizard automatic identification for configuration verification.
- Insert earphones: EAR-Tone 5A.
- Mechanical: High impact, GE Noryl® U.L. approved plastic housing.
- Display: 10.4" active matrix LCD color display with easy-touch user input. The display is adjustable over a 60-degree range so the screen can be set to the user's viewing preference.
- Physical: 17-1/2" W x 13" D x 3-1/2" H (44.5 cm x 33 cm x 8.9 cm); weight 11.3 lbs (5.1 kg).
- Power: Auto-selectable 90 to 240 VAC with transient suppression for power line spikes.
- Printer: High speed, extra-wide format graphics printer, 15 seconds with full compliance documentation.
- Data output: High speed RS232C.
- Rear panel jacks: Four separate, standard 1/4" stereo jacks for left earphone, right earphone, OSCAR™ and handswitch.
- Internal audiogram storage/backup: 10,000/10,000.
- Clock: Real-time, battery backed; time of day printout.

To order

HT Wizard	757
Soft-sided carrying case	T78790-0002
Paper/rl (standard)	T76498-9009
Paper/rl (long-life)	T76498-9010
OSCAR 6	751
OSCAR 7	752
AR 902 (right-hand hinge)	4562
AR 902 (left-hand hinge)	4561

ONE YEAR LIMITED WARRANTY: This warranty is extended to the original purchaser of the instrument, by Tremetrics, through the distributor or manufacturer from whom it was purchased. The warranty covers defects in material and workmanship for a period of one year from date of delivery of the instrument to the original purchaser. Accessories which are purchased from Tremetrics at the same time as the instrument are warranted for one year from the date of purchase. For additional information, contact Tremetrics.

TREMETRICS®

Tremetrics • 7625 Golden Triangle Drive • Eden Prairie, MN 55344
www.tremetrics.com • Toll Free (800) 825-0121 • Fax (952) 903-4100